THORN

96268121 <SATIN2 MRE L650 24L35 12X44° 840 KIT

IP68	IK10	⧈	CE	T_a50

A discreet floor recessed linear floodlight for façade illumination applications. 24 LEDs driven at 350mA with 12 x 44° distribution. Electronic, fixed output control gear. Body: extruded aluminium (EN AW-6060 T6) painted textured silver grey. Sides: die-cast aluminium painted textured silver grey. Enclosure: tempered glass 10mm thick. Class II electrical (this product is not earthed), IP68, IK10. Pre-wired with 1m of 2x1mm² H05RNF cable at one end, for connection to remote gear box. Complete with 4000K LED

Dimensions: 654 x 96 x 112 mm
Luminaire input power: 24 W
Weight: 4.44 kg

TLG_STN2_F_PDBMRE.jpg

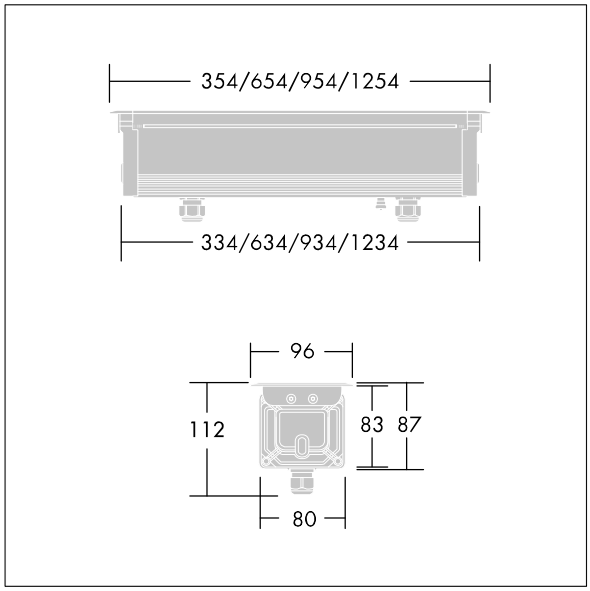

TLG_SATL_M_LD1_03.wmf

This product contains a light source of energy efficiency class E.

All values marked with an * are rated values. Thorn uses tried and tested components from leading suppliers, however there may be isolated instances of technology-related failures of individual LEDs during the rated product lifetime. International standards set the tolerance in initial flux and connected load at ±10%. Unless stated otherwise, the values apply to an ambient temperature of 25°C.

Thorn Lighting is constantly developing and improving its products. The right is reserved to change specifications without prior notification or public announcement.
© Thorn Lighting