EP 145 LED

96269263 EP 145 LED 36L70 NR 730 RS/MTP

ISO 9223 C5 | IP66 | IK08

EP 145 LED

A 19th Century styled post top lantern with 36 LEDs driven at 700mA with Narrow Road optic. Class II electrical (this product is not earthed), IP66, IK08. Body: stainless steel, painted black (close to RAL9005). Canopy: GRP/Polyester, black (close to RAL9005) finish. Enclosure: 5mm thick tempered glass. Complete with 3000K LED

Dimensions: 420 x 420 x 767 mm
Luminaire input power: 77 W
Weight: 8.6 kg
Scx: 0.145 m²

TLG_EP14_F_LEDMTPBLKPDB.jpg

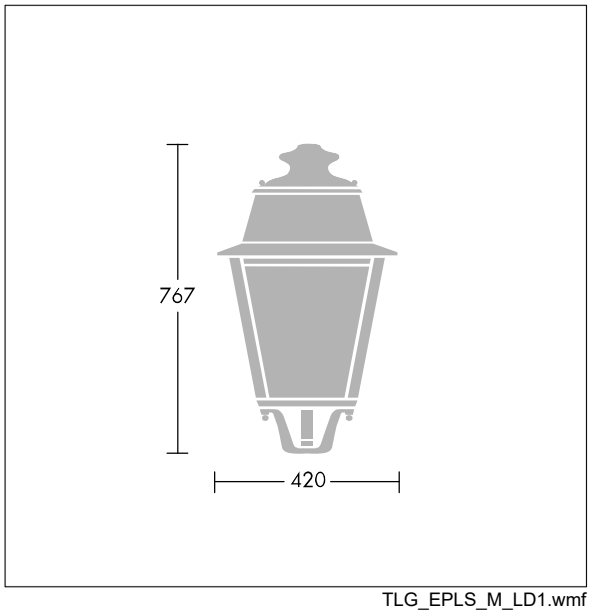

TLG_EPLS_M_LD1.wmf

This product contains a light source of energy efficiency class D.

All values marked with an * are rated values. Thorn uses tried and tested components from leading suppliers, however there may be isolated instances of technology-related failures of individual LEDs during the rated product lifetime. International standards set the tolerance in initial flux and connected load at ±10%. Unless stated otherwise, the values apply to an ambient temperature of 25°C.

Thorn Lighting is constantly developing and improving its products. The right is reserved to change specifications without prior notification or public announcement.
© Thorn Lighting