Urba

96270029 <URBA L 84L70 740 RC BP CL1 T76E W10 ANT

ISO 9223 C3 | IP66 | IK09

Urba

A large size LED urban street lighting lantern with 84 LEDs driven at 700mA with Road & Comfort optic. Electronic, fixed output control gear. Class I electrical, IP66, IK09. Body: die-cast aluminium, textured dark grey. Cover: tempered flat clear glass. Pre-wired with 10m cable. Post top mounting to Ø76mm column. Integral power reduction function which dims down to 50% power, effective 3 hours before and 5 hours after a calculated midnight. Complete with 4000K LED.

Dimensions: 1078 x 400 x 357 mm
Luminaire input power: 178 W
Weight: 16 kg
Scx: 0.13 m²

TLG_URBA_F_LMTPGYPDB.jpg

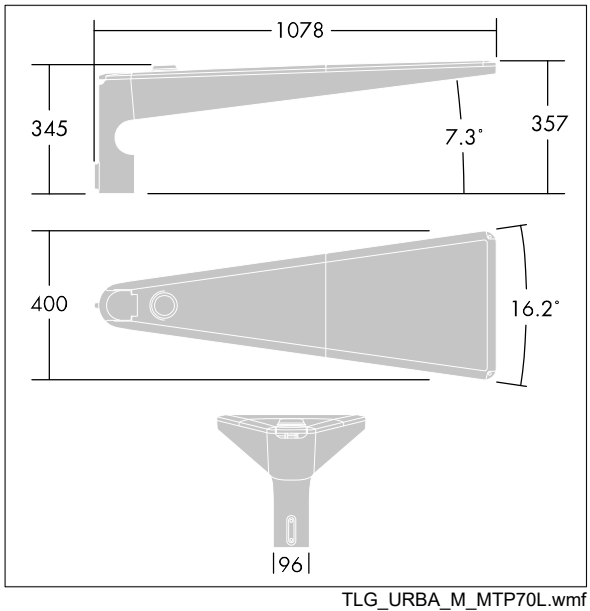

TLG_URBA_M_MTP70L.wmf

This product contains light sources of energy efficiency class D.

All values marked with an * are rated values. Thorn uses tried and tested components from leading suppliers, however there may be isolated instances of technology-related failures of individual LEDs during the rated product lifetime. International standards set the tolerance in initial flux and connected load at ±10%. Unless stated otherwise, the values apply to an ambient temperature of 25°C.

Thorn Lighting is constantly developing and improving its products. The right is reserved to change specifications without prior notification or public announcement.
© Thorn Lighting