96263398 <ALTIS HR 2KW R5 HQITSS-HF/MHNSBHO CL1 W
+ HIT-DE-MF (PH)

ISO 9223 C3	IP66	IK08	⏚	CE

A high performance discharge floodlight for 1 x 2000W Light Source: 1 x HIT-DE-MF / 2000W lamp. magnetic. Class I electrical, IP66. Body and frame: die-cast aluminium unpainted. Enclosure: 4mm thermally toughened glass. Stirrup fixed by single bolt through Ø22mm hole, or 105x17mm oblong hole, or by twin bolts through Ø15mm holes. Cable gland for 8 to 12mm cable. Aiming via integrated sights. Ideal for sports field and stadium lighting. Complete with hot restrike ignitor box. Gear tray to be ordered separately. Lamp to be ordered separately.

Luminaire input power: 2075 W
Dimensions: 566 x 626 x 285 mm
Weight: 16.55 kg
Scx: 0.21 m²

TLG_ALTI_F_STANDPDB.jpg

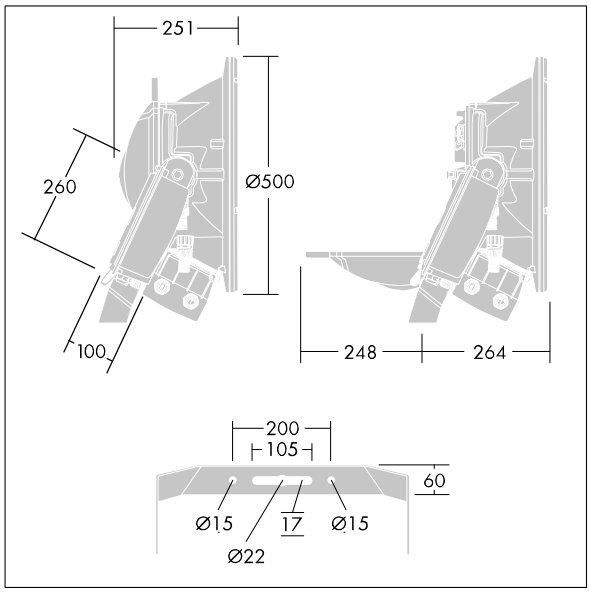

TLG_ALTI_M_HR BACK.wmf

All values marked with an * are rated values. Unless stated otherwise, the values apply to an ambient temperature of 25°C.

Thorn Lighting is constantly developing and improving its products. The right is reserved to change specifications without prior notification or public announcement.
© Thorn Lighting