<AquaForce II LED

96241944 <AQUAF2 LED 6400 HF TW L840

IP65	D	IK08	⏚	CE	850°C	T_a -20 +25

<AquaForce II LED

An IP65, dust and moisture resistant, LED luminaire. Electronic, fixed output control gear. Class I electrical. Canopy: light grey polycarbonate. Diffuser: polycarbonate with linear prisms. Toggles: stainless steel. For surface or suspended mounting. Quick-fix brackets supplied for surface mounting. Mounting kits for conduit, chain suspension and catenary suspension are available as accessories. Equipped with through wiring kit. Complete with 4000K LED.

Dimensions: 1600 x 147 x 118 mm
Luminaire input power: 53 W
Weight: 3.3 kg

TLG_AQUL_F_2PDB.jpg

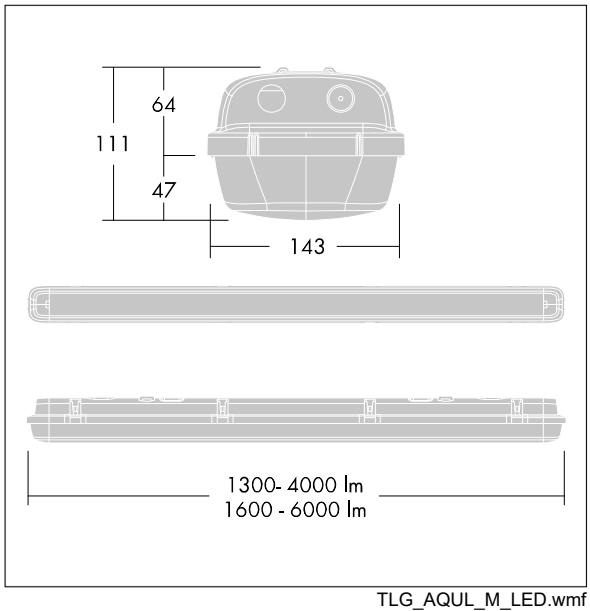

TLG_AQUL_M_LED.wmf

All values marked with an * are rated values. Thorn uses tried and tested components from leading suppliers, however there may be isolated instances of technology-related failures of individual LEDs during the rated product lifetime. International standards set the tolerance in initial flux and connected load at ±10%. Unless stated otherwise, the values apply to an ambient temperature of 25°C.

Thorn Lighting is constantly developing and improving its products. The right is reserved to change specifications without prior notification or public announcement.
© Thorn Lighting

<AquaForce II LED

96241944 <AQUAF2 LED 6400 HF TW L840

Thorn Lighting is constantly developing and improving its products. The right is reserved to change specifications without prior notification or public announcement.
© Thorn Lighting