ImpactForce

96240462 IMPACTF2 2X49W T16 HFI TW L840

IP65	IK08	⏚	CE	850°C

ImpactForce

A high performance IP65 dust and moisture resistant luminaire with a high impact resistance. For 2 x 49W Light Source: 2 x T16 / 49W lamp(s) with Electronic, DALI / DSI digital dimmable control gear circuit. Class I electrical. Canopy in light grey glass fibre reinforced polyester. Diffuser in polycarbonate with internal prisms. For surface or suspended mounting. Quick-fix installation brackets are supplied for surface mounting, optional accessory kits are avalable to help with other mounting options. Equipped with through wiring kit. Complete with 840 lamp(s).

Dimensions: 1594 x 167 x 125 mm
Luminaire input power: 105.5 W
Weight: 3.17 kg

TLG_XFRC_F_COL1.jpg

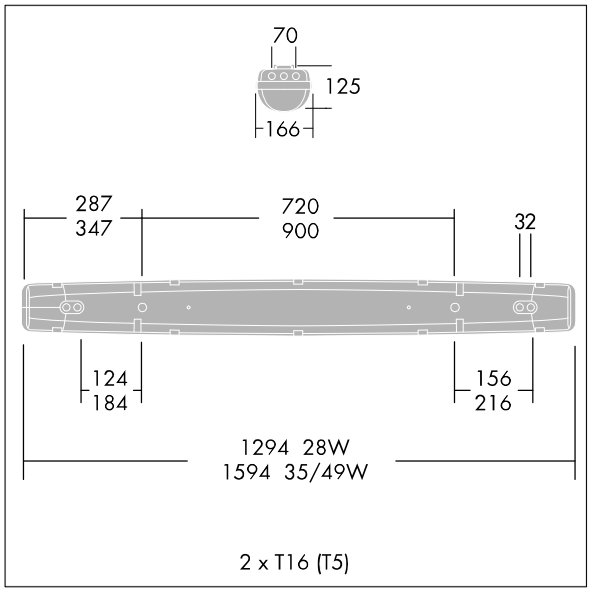

TLG_XFRC_M_TWLDT16.wmf

All values marked with an * are rated values. Unless stated otherwise, the values apply to an ambient temperature of 25°C.

Thorn Lighting is constantly developing and improving its products. The right is reserved to change specifications without prior notification or public announcement.
© Thorn Lighting

ImpactForce

96240462 IMPACTF2 2X49W T16 HFI TW L840

Thorn Lighting is constantly developing and improving its products. The right is reserved to change specifications without prior notification or public announcement.
© Thorn Lighting