Avenue F2

96260232 AVF 18L50-740 WST CL BS 3550 CL1 CON ->

IP66	IK08				

Avenue F2

Decorative post-top lantern with street distribution. Equipped with 50% power reduction circuit, effective 3 hours before and 5 hours after a calculated midnight. It can be deactivated at installation with an easily accessible internal switch. Class I electrical, IP66, IK08. Base and arms: die-cast aluminium (EN AC-46000), Canopy: spun aluminium, all powder coated dark sandy grey 900 (close to RAL7043). Diffuser: clear polycarbonate. Screw fixings: stainless steel. Supplied complete in one box. Surge protection: 10kV single pulse common mode and 8kV multipulse common mode and 6kV multipulse differential mode. If permanent DALI system is connected, 6kV multipulse common and differential mode. Complete with 4000K LED

Post top mounted on a spigot of Ø60mm, length 100mm.

Dimensions: Ø700/720 x 500 mm
Luminaire input power: 29 W
Weight: 9.3 kg
Scx: 0.17 m²
Luminaire efficacy: 134 lm/W

TLG_AVNF_F_3_AR2_1700.jpg

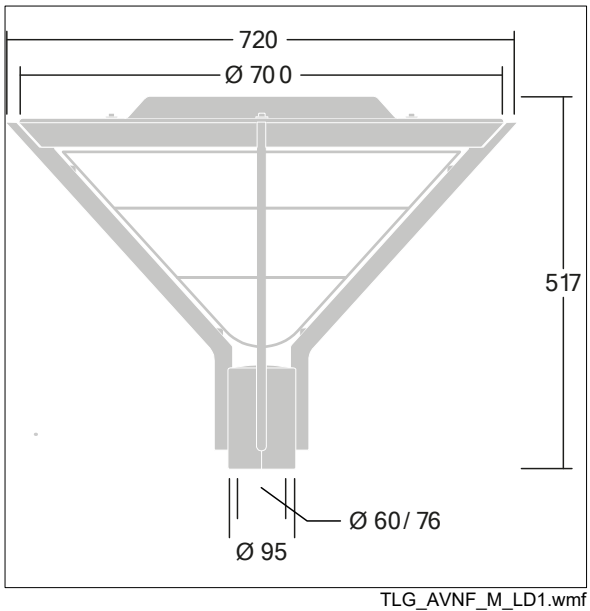

TLG_AVNF_M_LD1.wmf

All values marked with an * are rated values. Thorn uses tried and tested components from leading suppliers, however there may be isolated instances of technology-related failures of individual LEDs during the rated product lifetime. International standards set the tolerance in initial flux and connected load at ±10%. Unless stated otherwise, the values apply to an ambient temperature of 25°C.

Thorn Lighting is constantly developing and improving its products. The right is reserved to change specifications without prior notification or public announcement.
© Thorn Lighting