THORN

96260043 <AVENUE F2 60W CPO CL1 PM STR D76 LI

IP65	IK08				

Decorative post-top lantern for 1 x 60W Light Source: 1 x HIT-CE / 60W lamp with electronic control gear and street distribution. Equipped with Mini Photocell. Class I electrical, IP65, IK08. Base and arms: die-cast aluminium (LM6), Canopy: spun aluminium, all powder coated dark sandy grey 900 (close to RAL7043). Diffuser: clear polycarbonate. Screw fixings: stainless steel. Supplied complete in one box. Complete with lamp.

Post top mounted on a spigot of Ø76mm, length 100mm.

Dimensions: Ø700/700 x 500 mm
Luminaire input power: 66 W
Weight: 9.2 kg
Scx: 0.17 m²
Luminaire efficacy: 61 lm/W

TLG_AVNE_F_STREETCONV.jpg

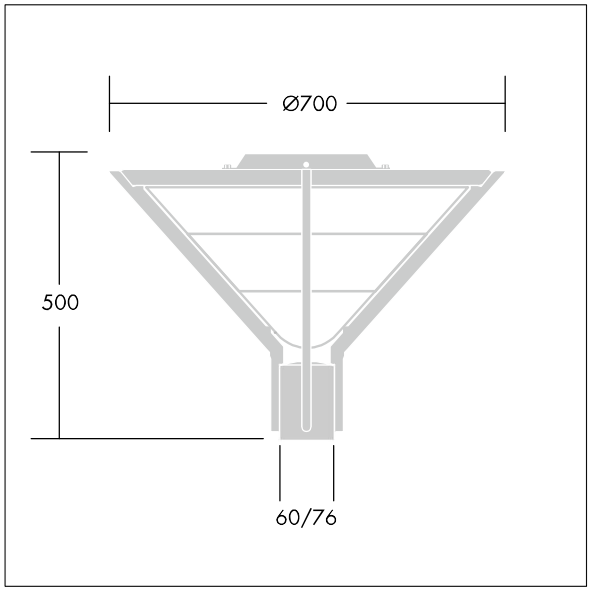

TLG_AVEF_M_LD1.wmf

All values marked with an * are rated values. Unless stated otherwise, the values apply to an ambient temperature of 25°C.

Thorn Lighting is constantly developing and improving its products. The right is reserved to change specifications without prior notification or public announcement.
© Thorn Lighting

96260043 <AVENUE F2 60W CPO CL1 PM STR D76 LI

Thorn Lighting is constantly developing and improving its products. The right is reserved to change specifications without prior notification or public announcement.
© Thorn Lighting