96260042 <AVENUE F2 60W CPO CL1 STR D76 LI

IP66 | IK08

Decorative post-top lantern for 1 x 60W Light Source: 1 x HIT-CE / 60W lamp with electronic control gear and street distribution. Class I electrical, IP66, IK08. Base and arms: die-cast aluminium (LM6), Canopy: spun aluminium, all powder coated dark sandy grey 900 (close to RAL7043). Diffuser: clear polycarbonate. Screw fixings: stainless steel. Supplied complete in one box. Complete with lamp.

Post top mounted on a spigot of Ø76mm, length 100mm.

Dimensions: Ø700/700 x 500 mm
Luminaire input power: 66 W
Weight: 9.1 kg
Scx: 0.17 m²
Luminaire efficacy: 61 lm/W

TLG_AVNE_F_STREETCONV.jpg

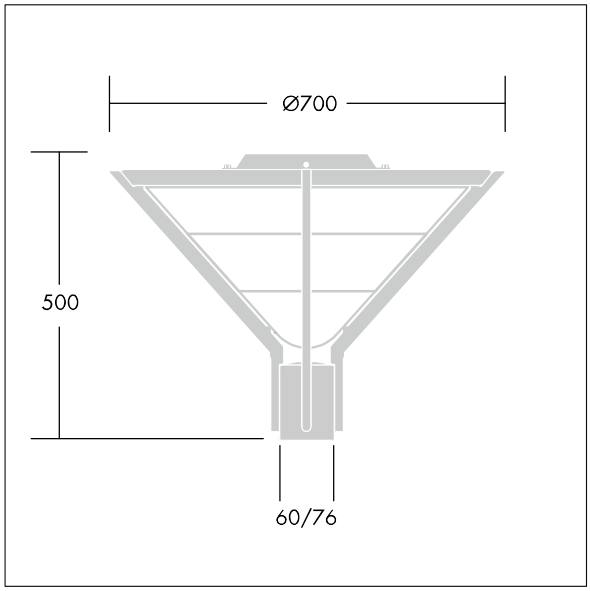

TLG_AVEF_M_LD1.wmf

All values marked with an * are rated values. Unless stated otherwise, the values apply to an ambient temperature of 25°C.

Thorn Lighting is constantly developing and improving its products. The right is reserved to change specifications without prior notification or public announcement.
© Thorn Lighting

96260042 <AVENUE F2 60W CPO CL1 STR D76 LI

Thorn Lighting is constantly developing and improving its products. The right is reserved to change specifications without prior notification or public announcement.
© Thorn Lighting