PopPack Pro battens and modules

96548115 <POPPACK PRO REFL DSB 1/2X35/49

THORN

PopPack Pro battens and modules

A white steel LiteLine reflector for PopPack Pro batten with single or twin 35/49W lamps with satinbrite louvre insert. Can be fitted to the luminaire without the need of any tools.

Dimensions: 1485 x 200 x 90 mm, weight: 1 kg

TLG_POPP_F_CLASSREFLDSB.jpg

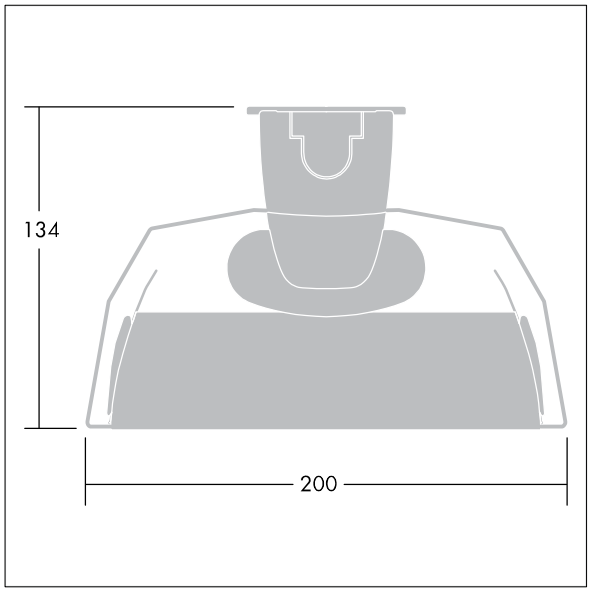

TLG_POPP_M_LDLITELREFDSBLV.wmf

All values marked with an * are rated values. Unless stated otherwise, the values apply to an ambient temperature of 25°C.

Thorn Lighting is constantly developing and improving its products. The right is reserved to change specifications without prior notification or public announcement.
© Thorn Lighting