THORN

96547674 EYE VS 1X28 TC-DDEL HF E3TX OP L SIL L84

IP65	IK10		CE			960°C	T_a 0 +25

Round, vandal resistant bulkhead luminaire for 1x28W Light Source: 1 x TC-DDEL / 28W lamp(s) with electronic - fixed output ballast and 3 hour SelfTest or Addressable Test if connected to Explorer Project/Vision. Class I electrical, IP65, IK10. Body, large size, in die-cast aluminium (LM6), powder coated silver-grey. Diffuser in opal polycarbonate. With die-cast aluminium visor feature. To be wall or ceiling mounted, electrical connection via 6 x 2 x 2.5mm² terminal block. Complete with 840 lamp(s).

Dimensions: Ø340 x 155 mm
Luminaire input power: 29 W
Weight: 3.5 kg

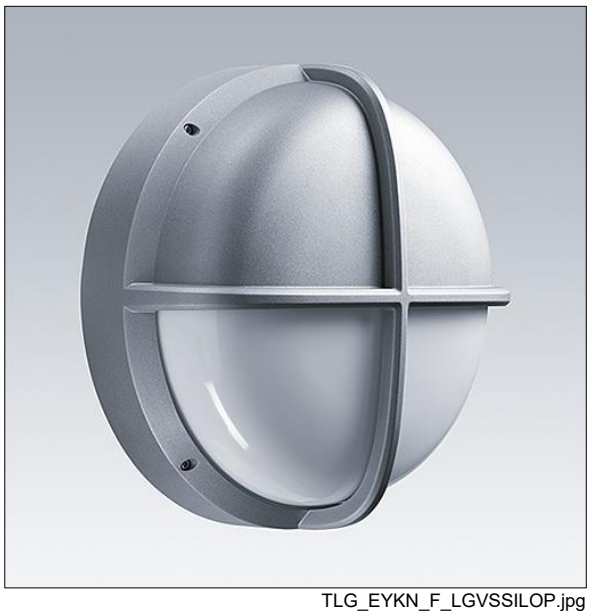

TLG_EYKN_F_LGVSSILOP.jpg

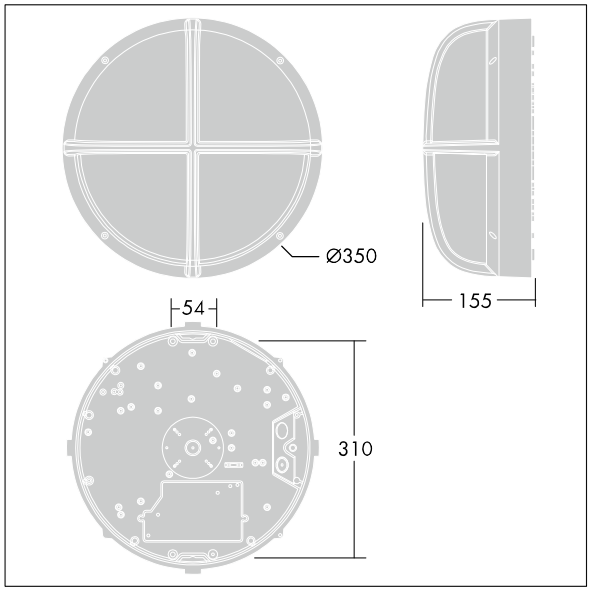

TLG_EYKN_M_LGE.wmf

All values marked with an * are rated values. Unless stated otherwise, the values apply to an ambient temperature of 25°C.

Thorn Lighting is constantly developing and improving its products. The right is reserved to change specifications without prior notification or public announcement.
© Thorn Lighting

THORN

96547674 EYE VS 1X28 TC-DDEL HF E3TX OP L SIL L84

Thorn Lighting is constantly developing and improving its products. The right is reserved to change specifications without prior notification or public announcement.
© Thorn Lighting