Plurio

96547224 <PLURIO RR 100W HST 240V CL1 ECL D76/L

IP66	IK08	⏚	CE

Plurio

Decorative, post-top lantern for 100W Light Source: 1 x HST-MF / 100W lamp, using magnetic gear. Class I electrical, IP66, IK08. Base in cast aluminium, powder coated silver-grey. Canopy in round shape, made from aluminium textured silver-grey (close to RAL9006). UV stabilised polycarbonate clear diffuser. Multi-facetted aluminium reflector.. Supplied complete, in one box. Complete with lamp.

To be post top mounted on a spigot of Ø76mm, length 100mm.

It is recommended that powdered ellipsoidal lamps are used with clear diffusers and clear tubular lamps are used with opal diffusers.

Dimensions: Ø564 x 564 mm
Luminaire input power: 117 W
Weight: 9.3 kg
Scx: 0.073m²

TLG_PLRO_F_RCB.jpg

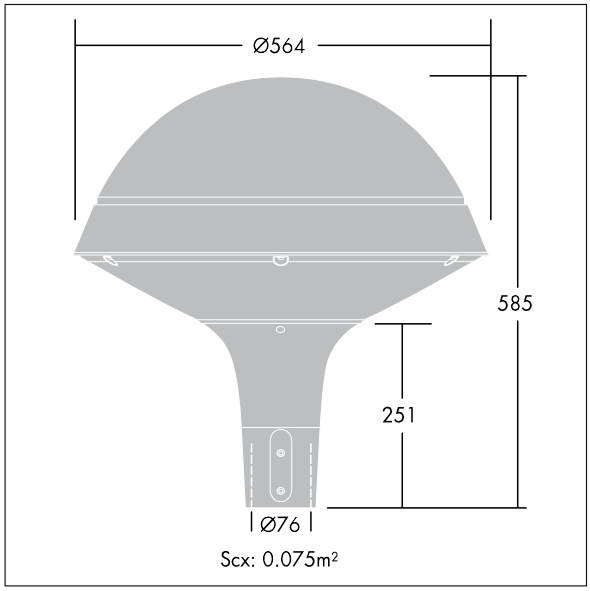

TLG_PLRO_M_SPHRd76.wmf

All values marked with an * are rated values. Unless stated otherwise, the values apply to an ambient temperature of 25°C.

Thorn Lighting is constantly developing and improving its products. The right is reserved to change specifications without prior notification or public announcement.
© Thorn Lighting