Duoproof

96535733 <DUOPRF 2X36W TC-L HF E3 IP65 L840

$T_{p(a)}$	IP65	IK07	⏚	CE	850°C	T_a25

Sealed IP65 recessed emergency luminaires

Recessed sealed luminaire with emergency lighting function. IP65. For 2 x 36W Light Source: 2 x TC-L / 36W lamp, electronic - fixed output ballast. Electronic control module and battery to provide 3 hour duration emergency lighting. Body fabricated from sheet steel with white powder coated finish. Frame fabricated from mild steel, with welded corners, finished white powder coated. Gasket: silicone. Diffuser panel clear prismatic PET/G, impact resistant and flame retardant (UK Building Regs Part B2 classification TP[a]). Complete with 840 lamp(s).

Dimensions: 592 x 590 x 90 mm
Luminaire input power: 73 W
Weight: 10.6 kg

TLG_DUOP_F_REC2.jpg

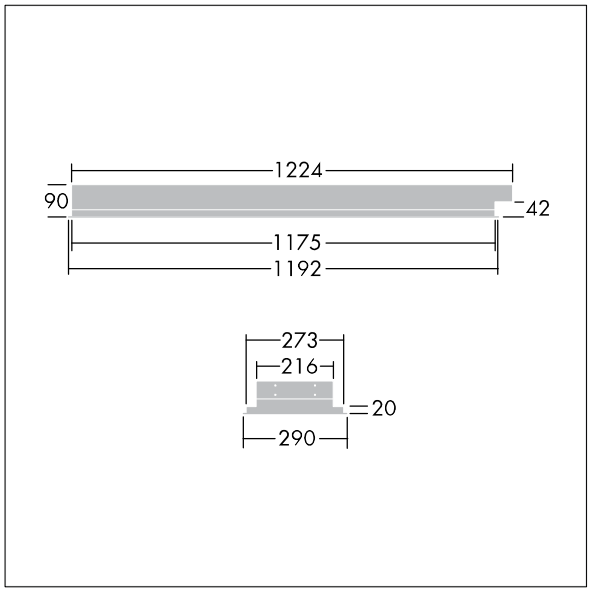

TLG_DUOP_M_LDT81200300.wmf

All values marked with an * are rated values. Unless stated otherwise, the values apply to an ambient temperature of 25°C.

Thorn Lighting is constantly developing and improving its products. The right is reserved to change specifications without prior notification or public announcement.
© Thorn Lighting

Duoproof

96535733 <DUOPRF 2X36W TC-L HF E3 IP65 L840

Thorn Lighting is constantly developing and improving its products. The right is reserved to change specifications without prior notification or public announcement.
© Thorn Lighting