Leopard

96238472 <LEOPARD 1X38W TC-DDEL HF PR SQ WHI L840

IP65	IK10		CE	850°C	T_a25

A range of low energy square and round bulkheads available in black or white with a choice of size and diffuser options.

A square bulkhead luminaire for 1 x 38W Light Source: 1 x TC-DDEL / 38W lamp. electronic - fixed output circuit. white body with prismatic polycarbonate plastic diffuser. Electrical safety class I. Ingress protection IP65. Supplied with 840 lamp.

Dimensions: 266 x 266 x 101 mm
Luminaire input power: 40 W
Weight: 1.8 kg

TLG_LPRD_F_SSBP.jpg

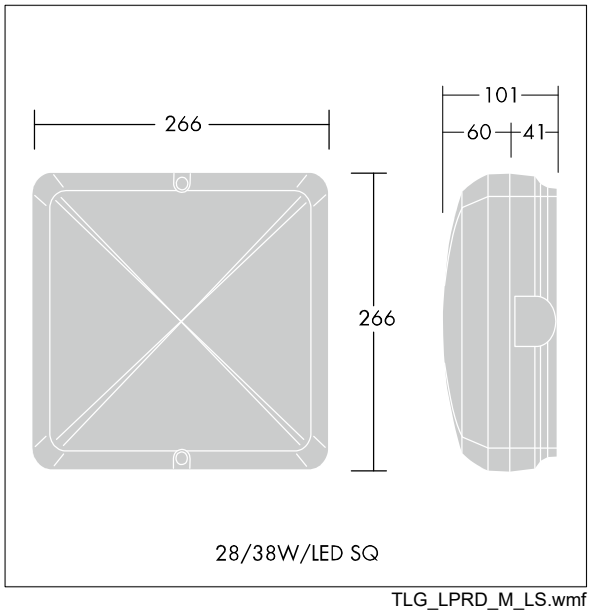

TLG_LPRD_M_LS.wmf

All values marked with an * are rated values. Unless stated otherwise, the values apply to an ambient temperature of 25°C.

Thorn Lighting is constantly developing and improving its products. The right is reserved to change specifications without prior notification or public announcement.
© Thorn Lighting