<AquaForce II

96236930 <AQUAF2 1x28W T16 HF E3 L840

IP65	D	IK08	⏚	CE	850°C	T_a25	

<AquaForce II

IP65 dust and moisture resistant luminaire for 1 x 28W Light Source: 1 x T16 / 28W lamp(s) with electronic - fixed output circuit and 3 hour manual test emergency function. Class I electrical. Canopy: light grey polycarbonate, diffuser: polycarbonate with internal prisms. For surface or suspended mounting. Quick-fix installation brackets are supplied with each luminaire for surface mounting and optional accessory kits are available to assist with other mounting options. Complete with 840 lamp(s).

Dimensions: 1300 x 94 x 118 mm
Luminaire input power: 31.5 W
Weight: 2.9 kg

TLG_AQU2_F_SINGLE.jpg

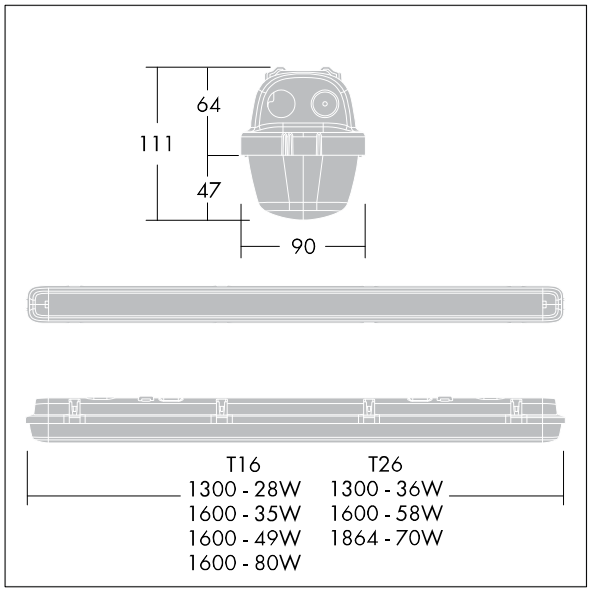

TLG_AQU2_M_IILD1.wmf

All values marked with an * are rated values. Unless stated otherwise, the values apply to an ambient temperature of 25°C.

Thorn Lighting is constantly developing and improving its products. The right is reserved to change specifications without prior notification or public announcement.
© Thorn Lighting